Models with
– knife-edge measuring faces for external dimensions
– rounded measuring faces for internal dimensions

– Provided with or without fine adjust device.

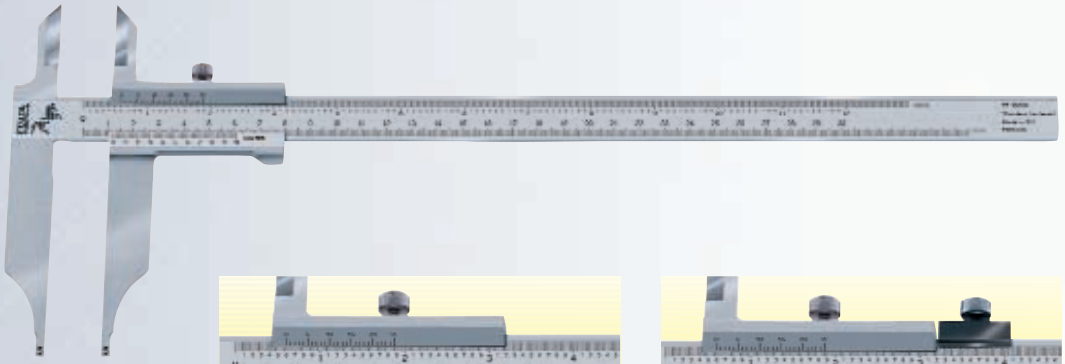

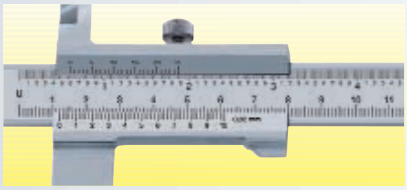

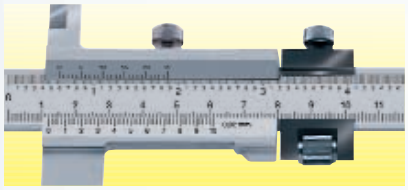

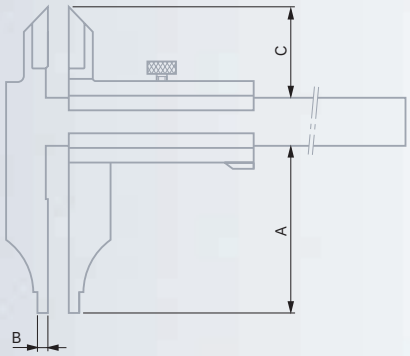

		mm	mm	in	in	Amm	Bmm	Cmm
Models without Fine Adjust Device								
75.10023	**05.17701**	0 ÷ 200	0,02			80	5	41
75.30005		0 ÷ 200	0,02	*0 ÷8*	$^1/_{128}$	80	5	41
	05.17702	0 ÷ 200	0,05			80	5	41
	05.17711	0 ÷ 250	0,02			80	5	41
75.10024	**05.17721**	0 ÷ 300	0,02			90	5	41
75.30006		0 ÷ 300	0,02	*0 ÷12*	$^1/_{128}$	90	5	41
	05.17722	0 ÷ 300	0,05			90	5	41
75.10025	**05.17741**	0 ÷ 500	0,02			150	10	60
75.30007		0 ÷ 500	0,02	*0 ÷ 20*	*0.001*	150	10	60
	05.17751	0 ÷ 600	0,02			150	10	60
Models with Fine Adjust Device								
75.10026	**05.17801**	0 ÷ 190	0,02			80	5	41
75.30008		0 ÷ 185	0,02	*0 ÷ 7*	$^1/_{128}$	80	5	41
	05.17811	0 ÷ 235	0,02			80	5	41
75.10027	**05.17821**	0 ÷ 285	0,02			90	5	41
75.30009		0 ÷ 280	0,02	*0 ÷11*	$^1/_{128}$	90	5	41
75.10028	**05.17841**	0 ÷ 500	0,02			150	10	60
75.30010		0 ÷ 500	0,02	*0 ÷ 20*	*0.001*	150	10	60
	05.17851	0 ÷ 600	0,02			150	10	60
	05.17861	0 ÷ 750	0,02			150	10	60
	05.17871	0 ÷1000	0,02			150	10	60

✓

DIN 862 (style BN-2) NF E 11-091

Satin-chrome scale background; main scale slightly set back for wear protection

Max. perm. error on page A-2

Hardened stainless steel

Wooden case

Identification number

Declaration of conformity